Uw partner voor vloerverwarming oplossingen

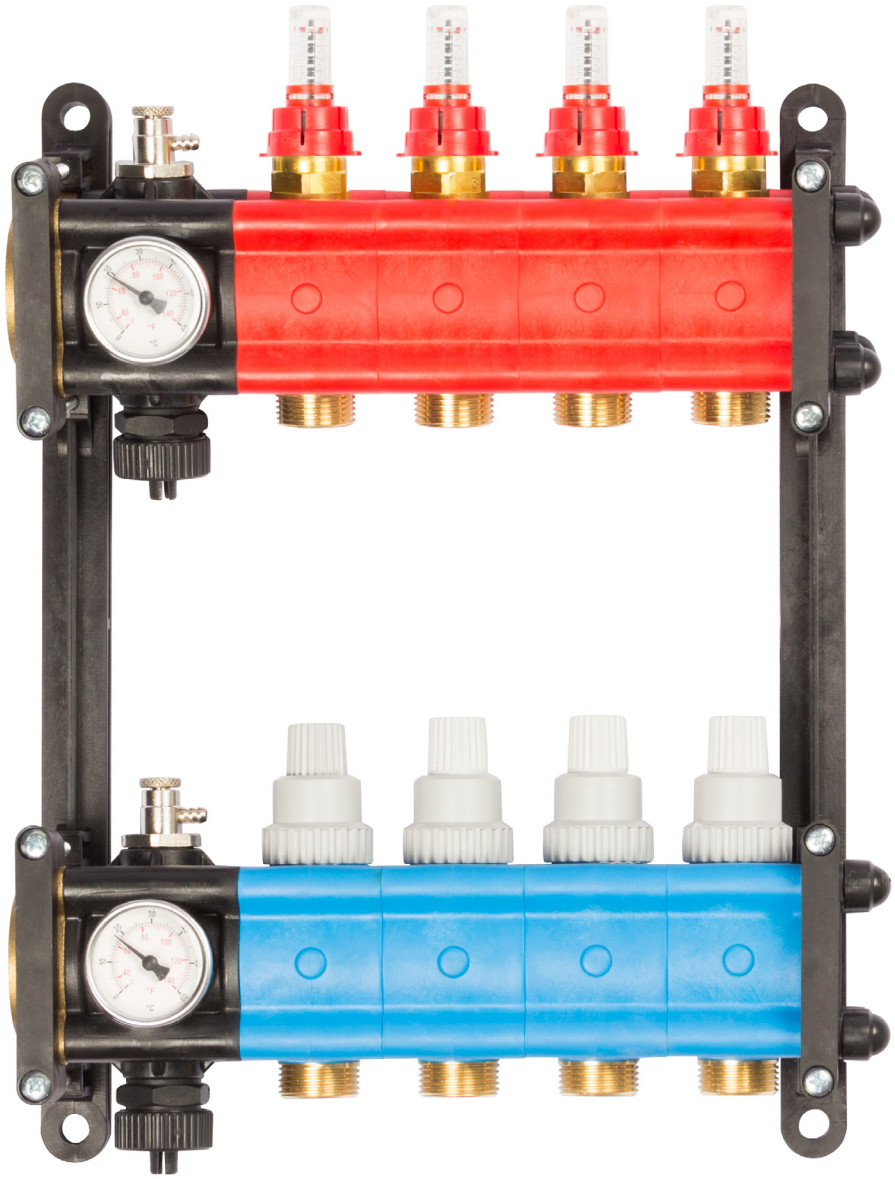

PRODUCTINFORMATIE

Kunststof verdeler 5/4" | B303002 - B303020

© SST Benelux

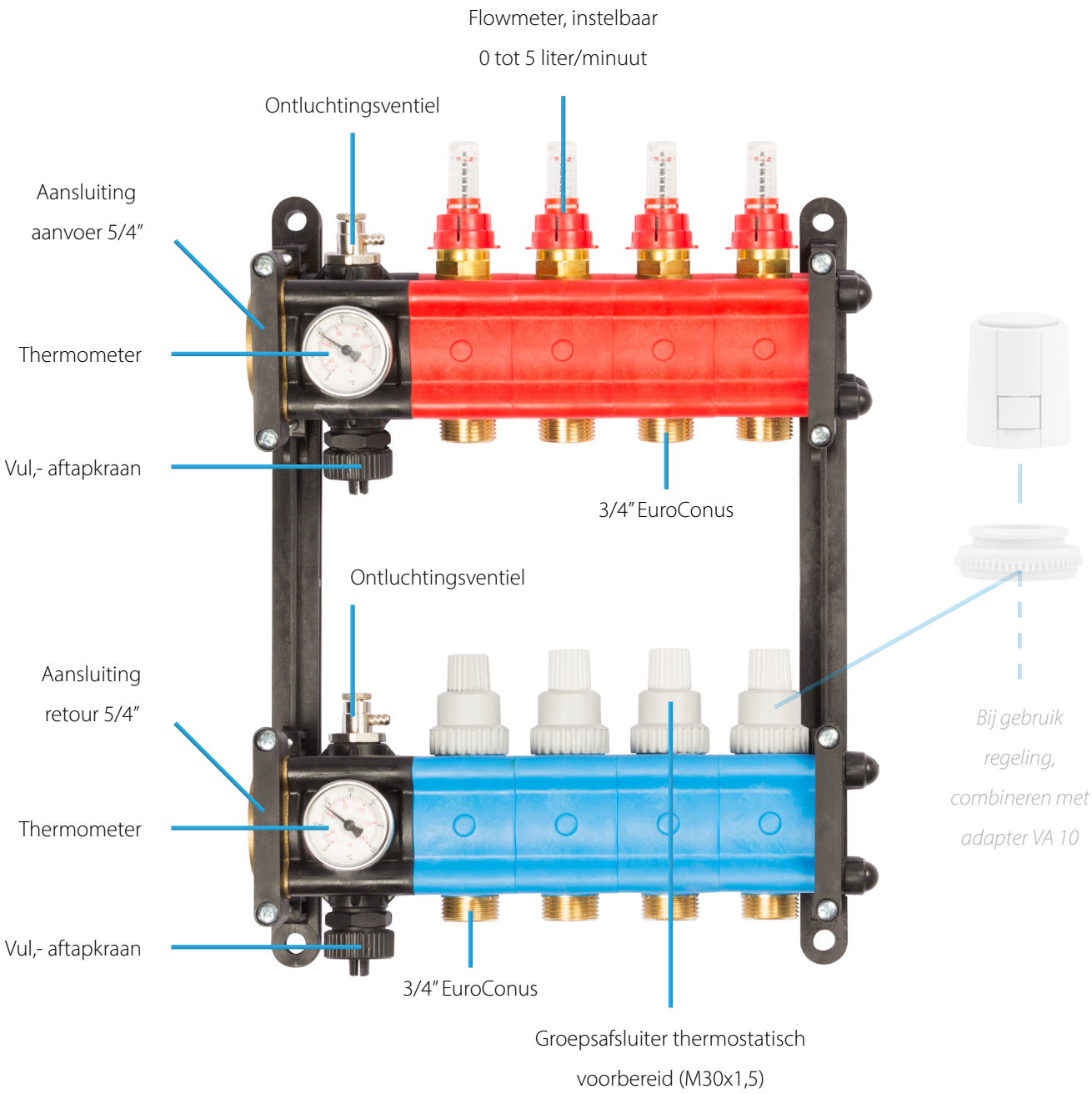
Flowmeter, instelbaar
0 tot 5 liter/minuut
Ontluchtingsventiel
Aansluiting
aanvoer 5/4”
Thermometer
Vul,- aftapkraan
3/4” EuroConus
Ontluchtingsventiel
Aansluiting
retour 5/4”
Thermometer
Vul,- aftapkraan
3/4” EuroConus
Groepsafsluiter thermostatisch
voorbereid (M30x1,5)
Bij gebruik
regeling,
combineren met
adapter VA 10

Art. nr.	Groepen	B x H x D
B303002	2	190 x 400 x 95 mm
B303003	3	235 x 400 x 95 mm
B303004	4	280 x 400 x 95 mm
B303005	5	325 x 400 x 95 mm
B303006	6	370 x 400 x 95 mm
B303007	7	415 x 400 x 95 mm
B303008	8	460 x 400 x 95 mm
B303009	9	505 x 400 x 95 mm
B303010	10	550 x 400 x 95 mm
B303011	11	595 x 400 x 95 mm
B303012	12	640 x 400 x 95 mm
B303013	13	685 x 400 x 95 mm
B303014	14	730 x 400 x 95 mm
B303015	15	775 x 400 x 95 mm
B303016	16	820 x 400 x 95 mm
B303017	17	865 x 400 x 95 mm
B303018	18	910 x 400 x 95 mm
B303019	19	955 x 400 x 95 mm
B303020	20	1000 x 400 x 95 mm

TECHNICAL DATA

Max percentage of glycol	50%	Manifold connection	11/4" F
Standard wordking pressure	1,5 - 2,5 bar	Outlets connection	3/4" M Eurocone
Max working pressure	6 bar	Centers distance	45 mm
Test pressure	8 bar	Box depth	110 mm
Temperature range	4 - 70 °C		

ADVATAGES USING MODULAR THERMOPLASTIC MANIFOLDS

- Perfect modularity and flexibility of adaptation to any use
- Modular blocks design minimize pressure drops. High flor volumes at low flow rates
- Modular blocks allow reduced stock handling - for the wholesaler and the installer
- Thermoplastic working lifespan far in excess of most cheap brass equivalents - 10 years guarantee
- Low heat loss, safe to touch and work with
- Flow meters with easy adjustment and clear visual indication
- Anti condensation
- Thermoplastic does not react with system chemicals unlike metals

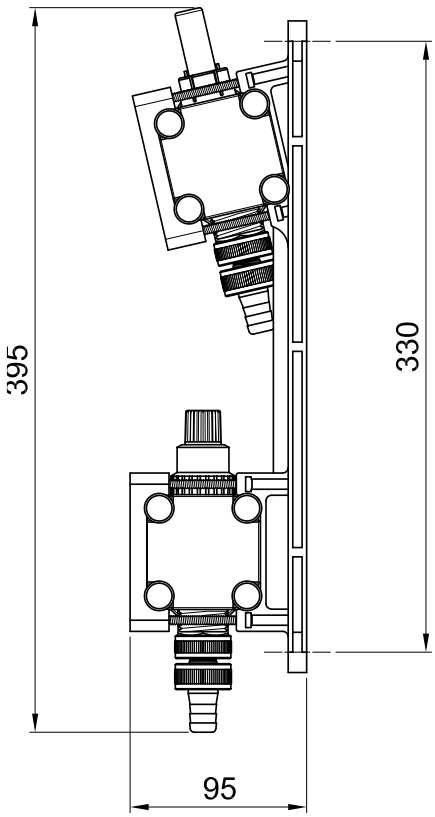

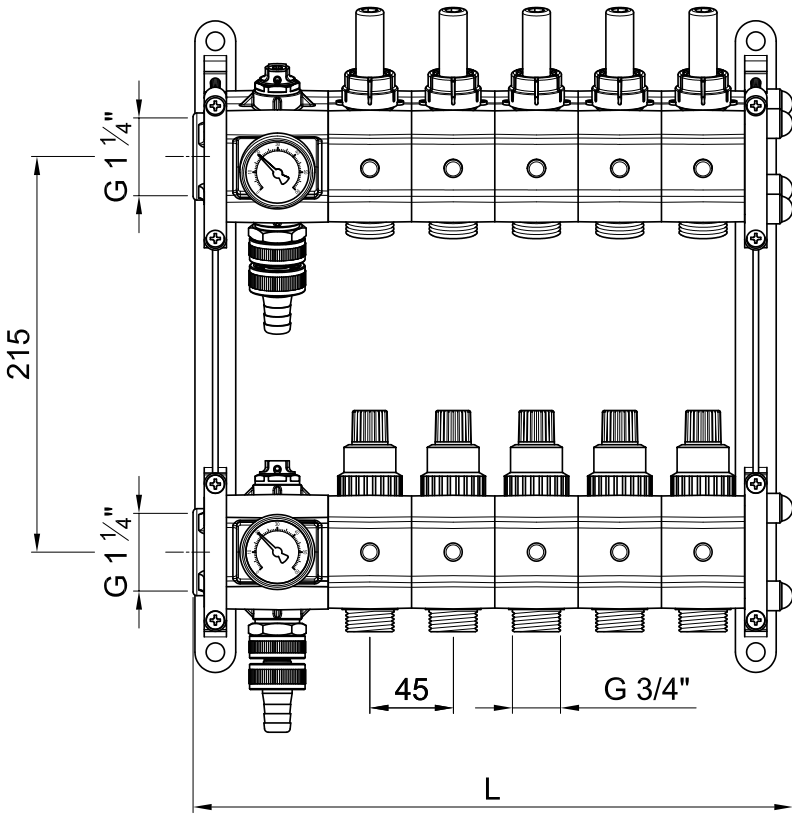

ASSEMBLY - COMPONENTS

The modules, the air vent block, the head and the terminal which up the manifold are joined with threaded bars inserted in the 4 holes of each component. Tightening of the nuts positioned on the head is preformed with a torque spanner to ensure seal evenness and stability between parts. Each assembled manifold undergoes strict tests to guarantee functionality and fluid passega sealing.

KIT

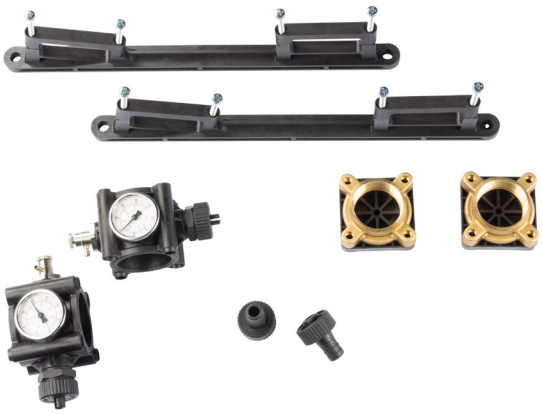

Materials

- air vent body/end part	PAS777
- brackets	PP
- screws	C15
- threaded rod	galvanized CR3 FE37
- brass parts	CW617N
- drain valve	PA6
- O-rings	NBR70

Kit contains

- N. 2 blocks with automatic air-vent and 3/4" connections
- N. 2 thermometers
- N. 2 brass heads 1 1/4" (1" also available)
- N. 2 plastic ends
- N. 2 filling nozzle kits
- N. 2 brackets for wall/cabinet mounting

SUPPLY MODULE

The supply module is equipped with a supply flow meter regulator valve. By means of this regulator valve, single circuit flow rates can be regulated at the desired value with precision. The value is read directly on the graduated support. When necessary, this valve allows hermetic closing of single circuits.

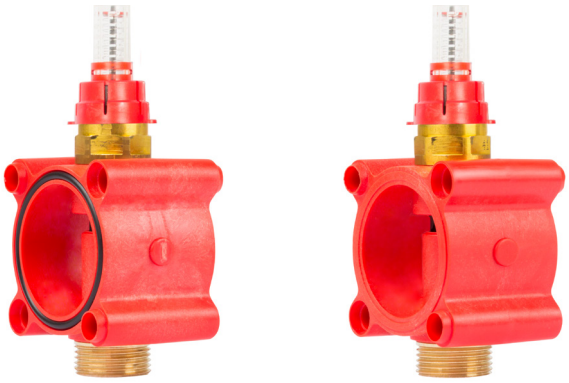

Materials

- body	PAS777
- flow meter body	PES
- indicator	POM
- coupling	CW614N
- knob	ABS
- red coupling cover	ABS
- O-rings	NBR70
- 3/4" connection	CW614N

RETURN MODULE

The return module is equipped with a shut-off valve with a manual knob by means of which single circuit flow can be reduced up to total closing of the circuit itself. This valve is equipped with a single piece stainless steel control rod with a double O-ring seal. The rubber valve is especially shaped to reduce load loss and noise from fluid passage to a minimum, preventing any fusion with the seal housing. The valve has been designed for application with electro-thermal control (thermal actuator), to make it automatic via signal from a room thermostat.

Materials

- body	PAS777
- thermostatic blok	CW614N
- stern	AISI303
- spring	AISI302
- knob	ABS
- O-rings	NBR70
- 3/4" connection	CW614N

MAIN TECHNICAL FEATURES

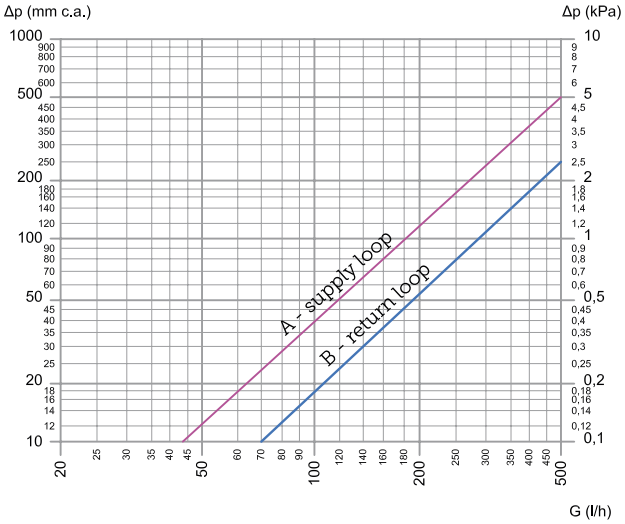

	Kv
A - supply loop - totally open	2
B - return loop - totally open	2,9

Kv = m^3/h flow / 1 bar loss of charge

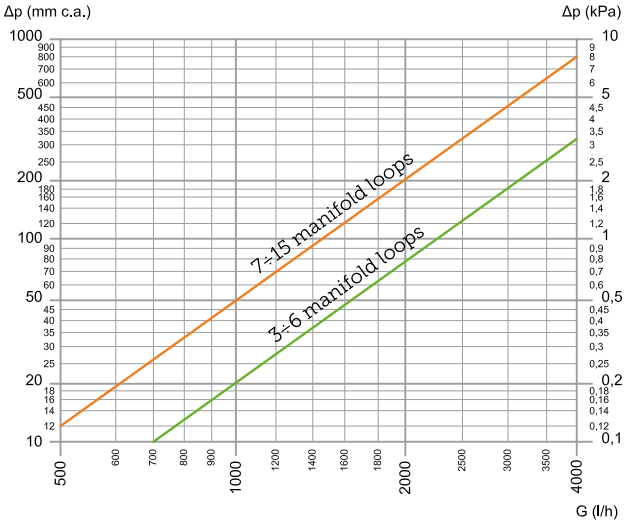

	Kv
3÷6 manifold loops - totally open	20
7÷15 manifold loops - totally open	16

Kv = m^3/h flow / 1 bar loss of charge

DISTRIBUTION MANIFOLD REGULATION - LOAD LOSS

Flow meter 0 - 5 L/min

(standard use)

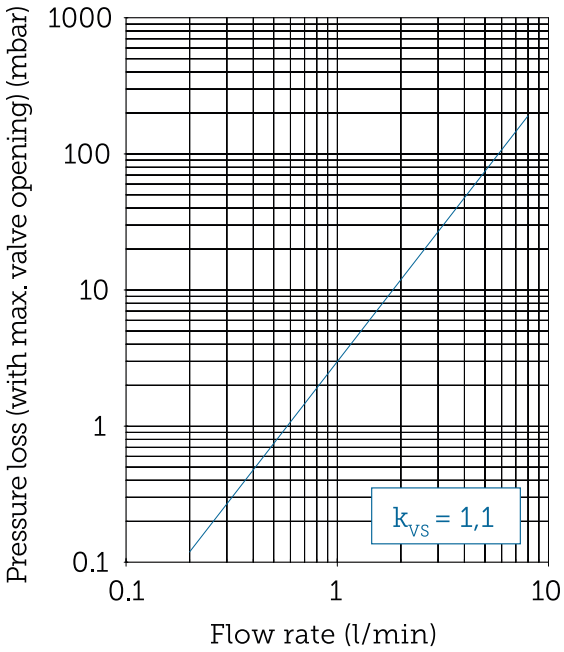

088-7780010

info@sst-benelux.nl

www.sst-europe.eu

Dit handboek is auteursrechterlijk beschermd. Alle rechten voorbehouden. Het mag noch volledig noch gedeeltelijk gekopieerd, gereproduceerd, in ingekorte of eender welke vorm verdergegeven worden zonder voorafgaandelijk akkoord van de fabrikant, noch op mechanische noch op elektronische wijze.

© SST Benelux